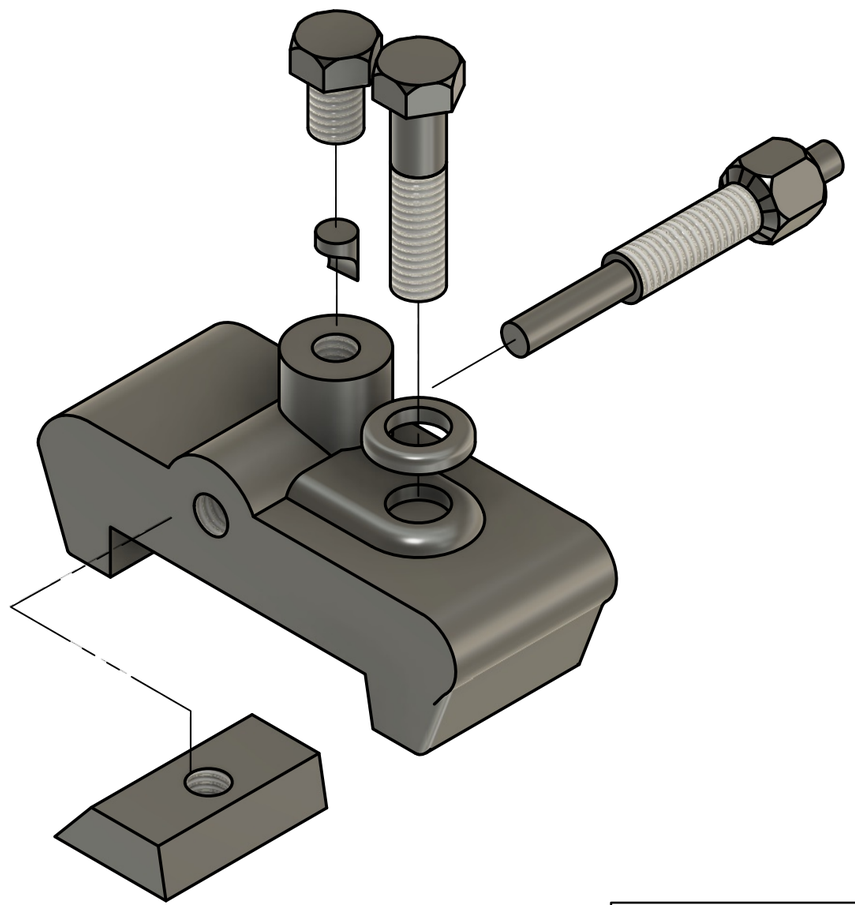

	PROJECT CAD Practice				
	TITLE Full Assembly				
APPROVED	SIZE B	CODE	DWG NO		REV
CHECKED					
DRAWN Nikhil Arun 2/17/2026	SCALE 1:1		WEIGHT		SHEET 1/8

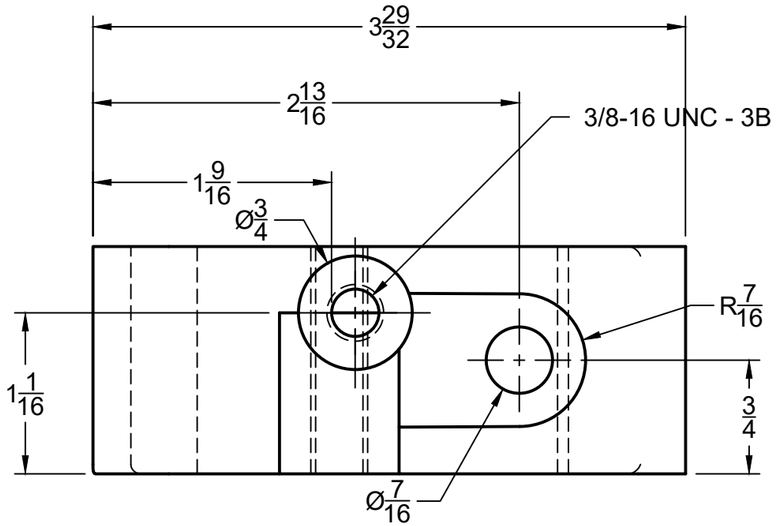

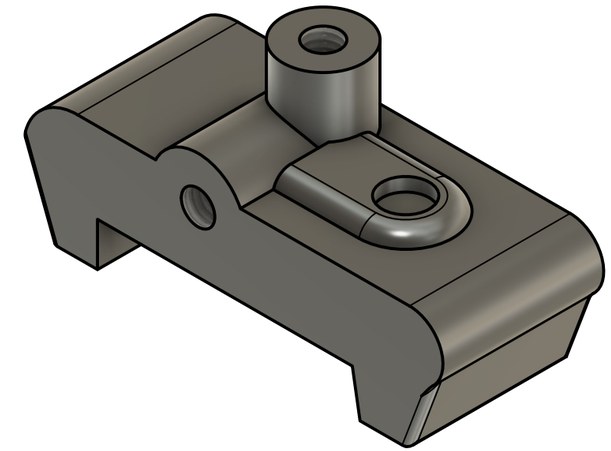

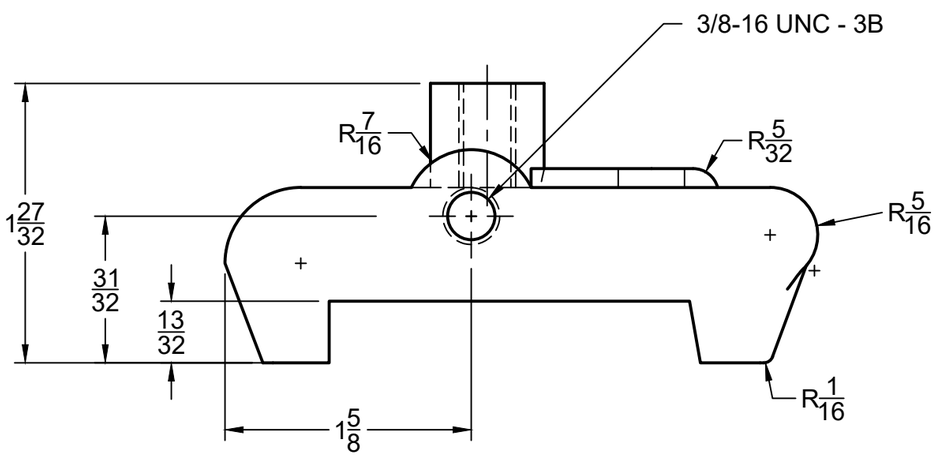

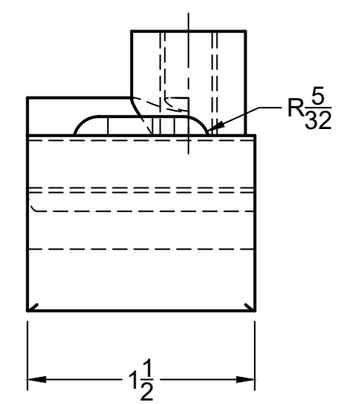

	PROJECT CAD Practice			
	TITLE Cap			
APPROVED	SIZE	CODE	DWG NO	REV
CHECKED	B			
DRAWN Nikhil Arun 2/17/2026	SCALE 1:1 (From parent)	WEIGHT		SHEET 2/8

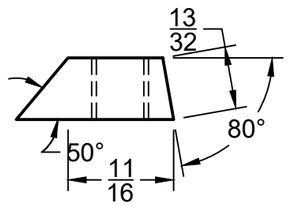

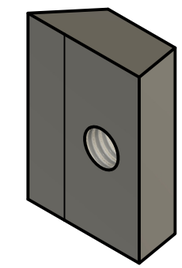

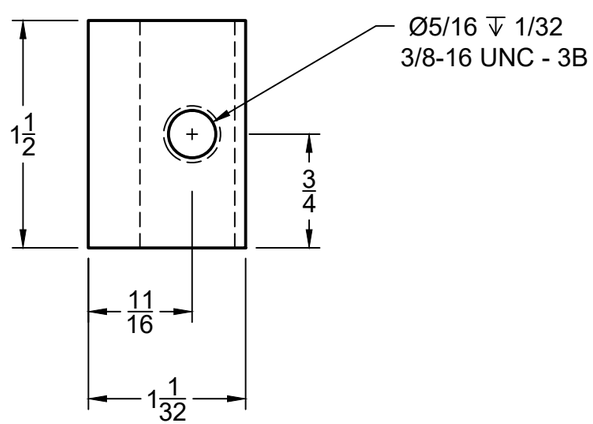

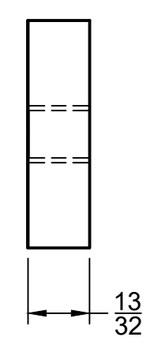

	PROJECT CAD Practice			
	TITLE Wedge			
APPROVED	SIZE B	CODE	DWG NO	REV
CHECKED				
DRAWN Nikhil Arun 2/17/2026	SCALE 1:1	WEIGHT	SHEET 3/8	

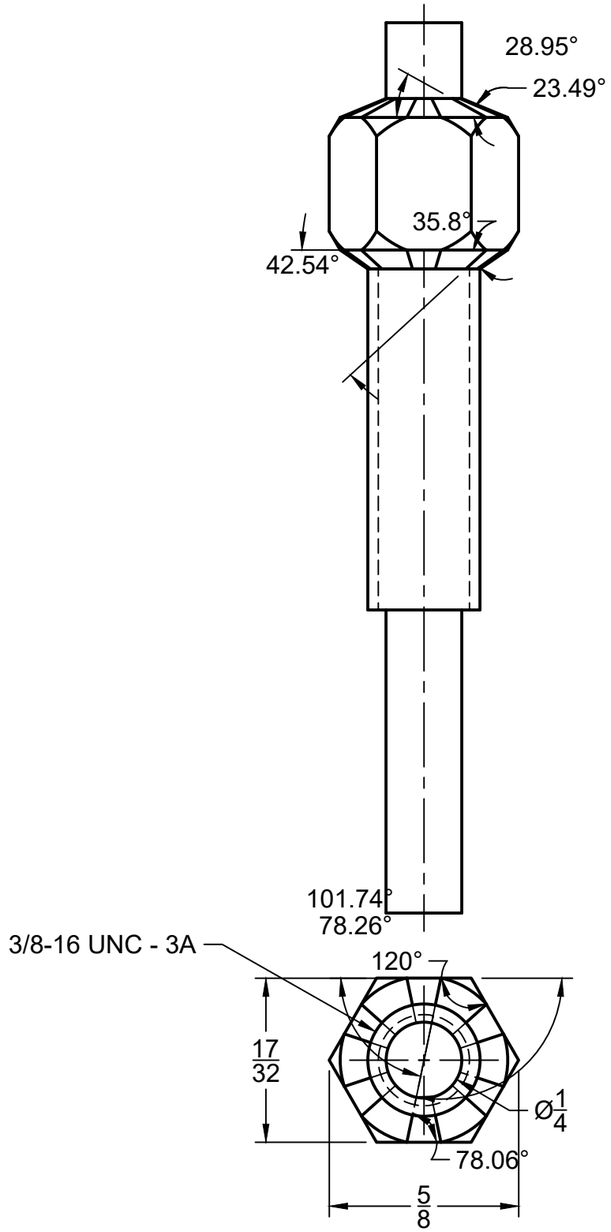

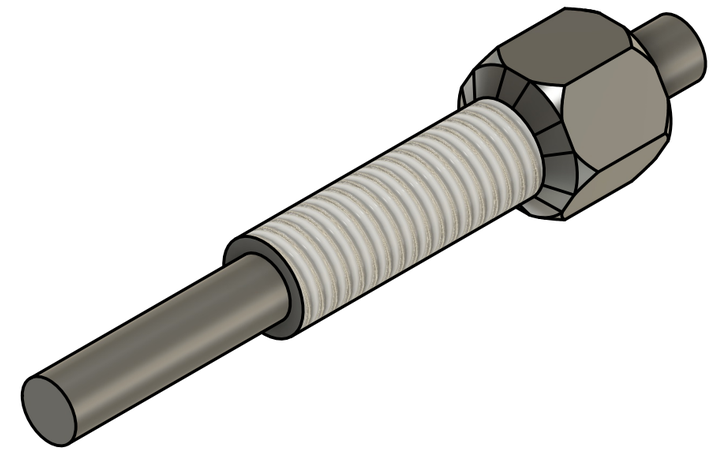

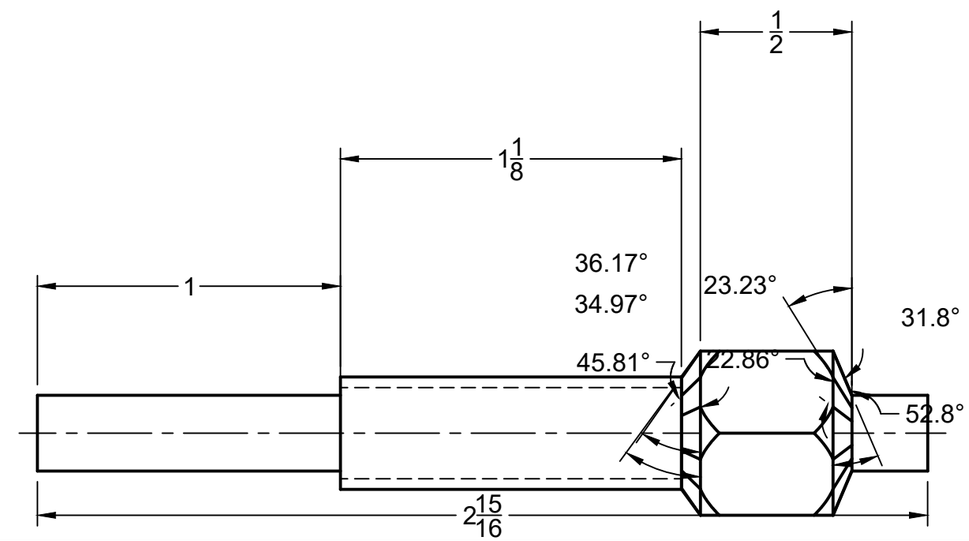

PROJECT CAD Practice				
TITLE Adjust Screw				
APPROVED	SIZE	CODE	DWG NO	REV
CHECKED	B			
DRAWN Nikhil Arun 2/17/2026	SCALE 2:1 (From parent)	WEIGHT		SHEET 4/8

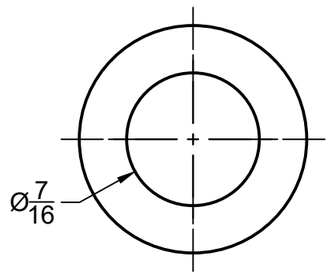

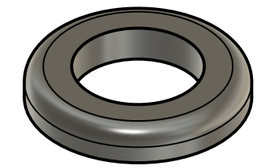

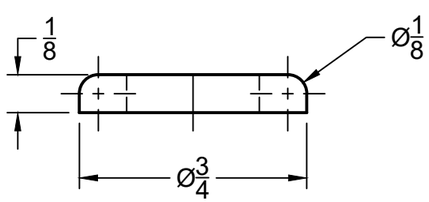

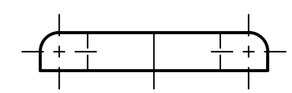

	PROJECT CAD Practice			
	TITLE Washer			
APPROVED	SIZE B	CODE	DWG NO	REV
CHECKED				
DRAWN Nikhil Arun 2/17/2026	SCALE 2:1 (From parent)	WEIGHT	SHEET 5/8	

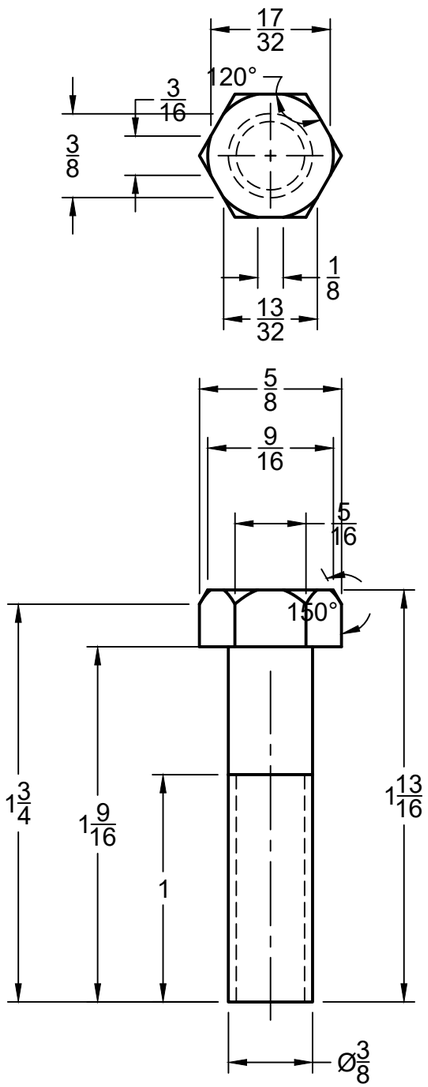

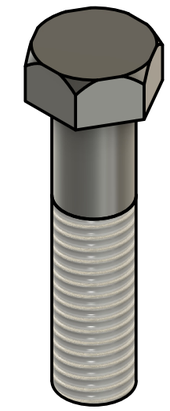

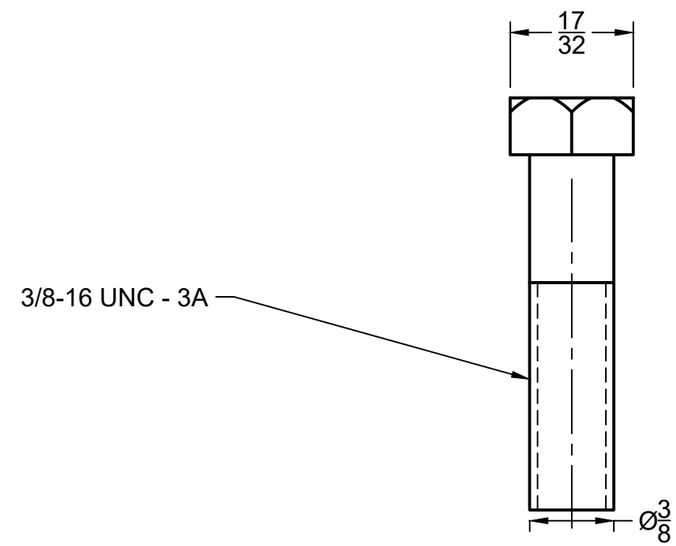

	PROJECT CAD Practice			
	TITLE Screw			
APPROVED	SIZE	CODE	DWG NO	REV
CHECKED	B			
DRAWN Nikhil Arun 2/17/2026	SCALE 1.5:1	WEIGHT		SHEET 6/8

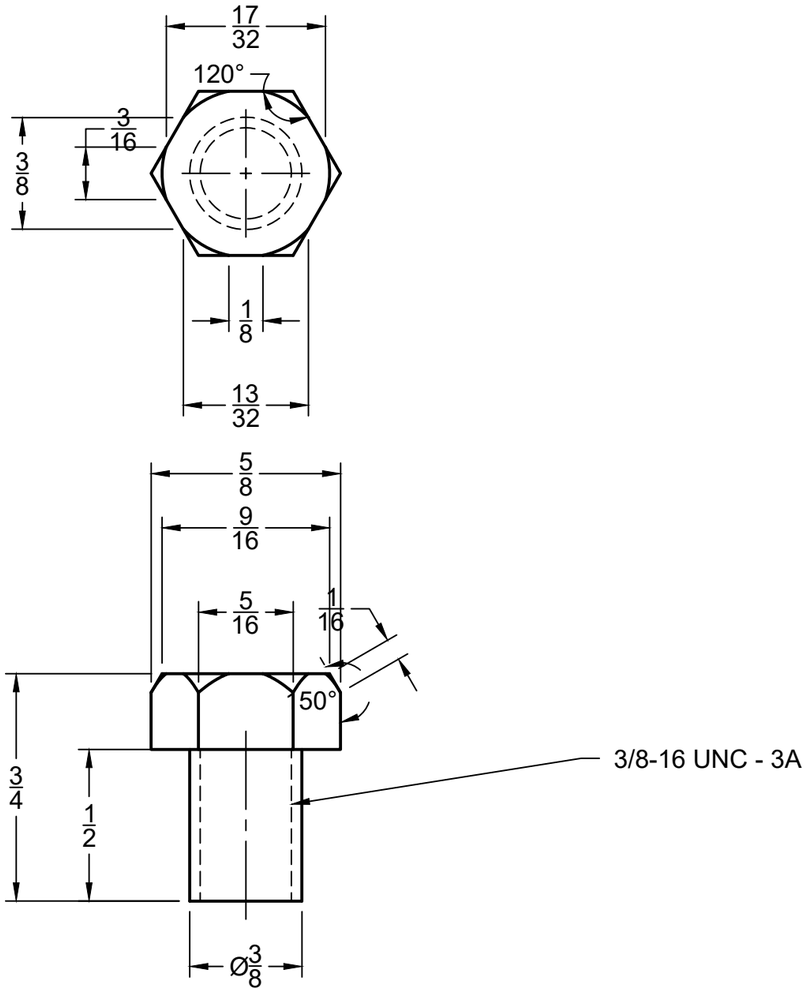

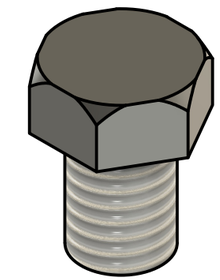

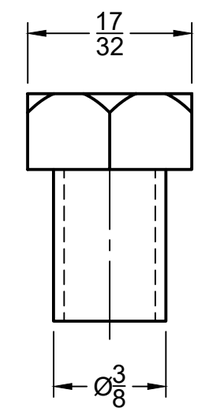

	PROJECT CAD Practice			
	TITLE Set Screw			
APPROVED	SIZE	CODE	DWG NO	REV
CHECKED	B			
DRAWN Nikhil Arun 2/17/2026	SCALE 2:1 (From parent)	WEIGHT		SHEET 7/8

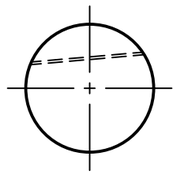

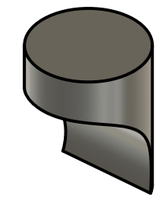

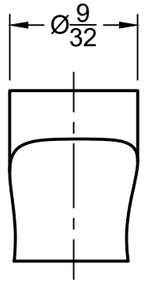

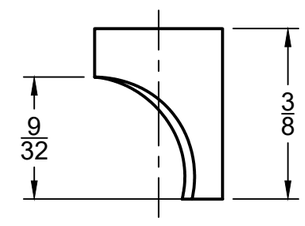

	PROJECT CAD Practice			
	TITLE Cushion			
APPROVED	SIZE	CODE	DWG NO	REV
CHECKED	B			
DRAWN Nikhil Arun 2/17/2026	SCALE 3:1 (From parent)	WEIGHT		SHEET 8/8